INTERNATIONAL STANDARD

IEC 61386-1

First edition
1996-11

Conduit systems for electrical installations –

Part 1:
General requirements

*This **English-language** version is derived from the original **bilingual** publication by leaving out all French-language pages. Missing page numbers correspond to the French-language pages.*

Reference number
IEC 61386-1:1996(E)

Publication numbering

As from 1 January 1997 all IEC publications are issued with a designation in the 60000 series. For example, IEC 34-1 is now referred to as IEC 60034-1.

Consolidated editions

The IEC is now publishing consolidated versions of its publications. For example, edition numbers 1.0, 1.1 and 1.2 refer, respectively, to the base publication, the base publication incorporating amendment 1 and the base publication incorporating amendments 1 and 2.

Further information on IEC publications

The technical content of IEC publications is kept under constant review by the IEC, thus ensuring that the content reflects current technology. Information relating to this publication, including its validity, is available in the IEC Catalogue of publications (see below) in addition to new editions, amendments and corrigenda. Information on the subjects under consideration and work in progress undertaken by the technical committee which has prepared this publication, as well as the list of publications issued, is also available from the following:

- **IEC Web Site (www.iec.ch)**

- **Catalogue of IEC publications**

  The on-line catalogue on the IEC web site (www.iec.ch/searchpub) enables you to search by a variety of criteria including text searches, technical committees and date of publication. On-line information is also available on recently issued publications, withdrawn and replaced publications, as well as corrigenda.

- **IEC Just Published**

  This summary of recently issued publications (www.iec.ch/online_news/ justpub) is also available by email. Please contact the Customer Service Centre (see below) for further information.

- **Customer Service Centre**

  If you have any questions regarding this publication or need further assistance, please contact the Customer Service Centre:

  Email: custserv@iec.ch
  Tel: +41 22 919 02 11
  Fax: +41 22 919 03 00

INTERNATIONAL STANDARD

IEC 61386-1

First edition
1996-11

Conduit systems for electrical installations –

Part 1:
General requirements

International Electrotechnical Commission, 3, rue de Varembé, PO Box 131, CH-1211 Geneva 20, Switzerland
Telephone: +41 22 919 02 11 Telefax: +41 22 919 03 00 E-mail: inmail@iec.ch Web: www.iec.ch

Commission Electrotechnique Internationale
International Electrotechnical Commission
Международная Электротехническая Комиссия

PRICE CODE V

For price, see current catalogue

CONTENTS

INTERNATIONAL ELECTROTECHNICAL COMMISSION

CONDUIT SYSTEMS FOR ELECTRICAL INSTALLATIONS –

Part 1: General requirements

FOREWORD

1) The IEC (International Electrotechnical Commission) is a worldwide organization for standardization comprising all national electrotechnical committees (IEC National Committees). The object of the IEC is to promote international co-operation on all questions concerning standardization in the electrical and electronic fields. To this end and in addition to other activities, the IEC publishes International Standards. Their preparation is entrusted to technical committees; any IEC National Committee interested in the subject dealt with may participate in this preparatory work. International, governmental and non-governmental organizations liaising with the IEC also participate in this preparation. The IEC collaborates closely with the International Organization for Standardization (ISO) in accordance with conditions determined by agreement between the two organizations.

2) The formal decisions or agreements of the IEC on technical matters express, as nearly as possible, an international consensus of opinion on the relevant subjects since each technical committee has representation from all interested National Committees.

3) The documents produced have the form of recommendations for international use and are published in the form of standards, technical reports or guides and they are accepted by the National Committees in that sense.

4) In order to promote international unification, IEC National Committees undertake to apply IEC International Standards transparently to the maximum extent possible in their national and regional standards. Any divergence between the IEC Standard and the corresponding national or regional standard shall be clearly indicated in the latter.

5) The IEC provides no marking procedure to indicate its approval and cannot be rendered responsible for any equipment declared to be in conformity with one of its standards.

6) Attention is drawn to the possibility that some of the elements of this International Standard may be the subject of patent rights. The IEC shall not be held responsible for identifying any or all such patent rights.

International Standard IEC 1386-1 has been prepared by subcommittee 23A: Cable management systems, of IEC technical committee 23: Electrical accessories.

The text of this standard is based on the following documents:

FDIS	Report on voting
23A/260/FDIS	23A/274/RVD

Full information on the voting for the approval of this standard can be found in the report on voting indicated in the above table.

This part 1 is to be used in conjunction with the appropriate part 2, which contains clauses to supplement or modify the corresponding clauses in part 1, to provide the relevant particular requirements for each type of product. A conduit system which conforms to this standard is deemed safe for use.

In this publication, the following print types are used:

- Requirements proper: in roman type.
- *Test specifications: in italic type.*
- Explanatory matter: in smaller roman type.

Annex A is an integral part of this standard.

CONDUIT SYSTEMS FOR ELECTRICAL INSTALLATIONS –

Part 1: General requirements

1 Scope

This part of IEC 1386 specifies requirements and tests for conduit systems, including conduits and conduit fittings, for the protection and management of insulated conductors and/or cables in electrical installations or in communication systems up to 1000 V a.c. and/or 1500 V d.c. This standard applies to metallic, non-metallic and composite conduit systems, including threaded and non-threaded entries which terminate the system. This standard does not apply to enclosures and connecting boxes which come within the scope of IEC 670.

NOTES

1 Certain conduit systems may also be suitable for use in hazardous atmospheres. Regard should then be taken of the extra requirements necessary for equipment to be installed in such conditions.

2 Earthing conductors may or may not be insulated.

2 Normative references

The following normative documents contain provisions which through reference in this text, constitute provisions of this part of IEC 1386. At the time of publication, the editions indicated were valid. All normative documents are subject to revision, and parties to agreements based on this part of IEC 1386 are encouraged to investigate the possibility of applying the most recent editions of the normative documents indicated below. Members of IEC and ISO maintain registers of currently valid International Standards.

IEC 417: 1973, *Graphical symbols for use on equipment. Index, survey and compilation of the single sheets, as well as all of the supplements A to L*

IEC 423: 1993, *Conduits for electrical purposes – Outside diameters of conduits for electrical installations and threads for conduits and fittings*

IEC 529: 1989, *Degrees of protection provided by enclosures (IP Code)*

IEC 670: 1989, *General requirements for enclosures for accessories for household and similar fixed electrical installations*

IEC 695-2-1/1:1991, *Fire hazard testing – Part 2: Test methods – Section 1/Sheet 1: Glow-wire end-product test and guidance*

IEC 695-2-4/1: 1991, *Fire hazard testing – Part 2: Test methods – Section 4/Sheet 1: 1 kW nominal pre-mixed test flame and guidance*

3 Definitions

For the purposes of this International Standard, the following definitions apply:

3.1 **conduit system:** Closed wiring system consisting of conduits and conduit fittings for the protection and management of insulated conductors and/or cables in electrical or communication installations, allowing them to be drawn in and/or replaced, but not to be inserted laterally.

3.2 **conduit:** Part of a closed wiring system of general circular cross-section for insulated conductors and/or cables in electrical or communication installations, allowing them to be drawn in and/or replaced.

3.3 **conduit fitting:** Device designed to join or terminate one or more components of a conduit system, or for them to change direction.

3.4 **metallic conduit and/or conduit fitting**: Conduit or conduit fitting which consists of metal only.

3.5 **non-metallic conduit and/or conduit fitting**: Conduit or conduit fitting which consists uniquely of non-metallic material and which has no metallic components whatsoever.

3.6 **composite conduit and/or conduit fitting**: Conduit or conduit fitting comprising both metallic and non-metallic materials.

3.7 **non-flame propagating conduit and/or conduit fitting**: Conduit or conduit fitting which is liable to catch fire as a result of an applied flame, but in which the flame does not propagate, and which extinguishes itself within a limited time after the flame is removed.

3.8 **plain conduit**: Conduit in which the profile is even in the longitudinal section. (see note to 3.9).

3.9 **corrugated conduit**: Conduit in which the profile is corrugated in the longitudinal section.

NOTE – Both annular and helical corrugated conduits are permissible, and a combination of both corrugated and plain conduit is possible.

3.10 **rigid conduit**: Conduit which cannot be bent, or which can only be bent with the help of a mechanical aid, with or without special treatment.

3.11 **pliable conduit**:Conduit which can be bent by hand with reasonable force, and which is not intended for frequent flexing.

3.12 **flexible conduit**: Conduit which can be bent by hand with reasonable small force, and which is intended to flex frequently throughout its life.

3.13 **self-recovering conduit:** Pliable conduit which deforms when a transverse force is applied for a short time and which, after removal of this force, returns close to its original shape within a further short time.

3.14 **material thickness of a plain conduit**: Average difference between the outside and inside diameter, divided by two.

3.15 **material thickness of a corrugated conduit**: Average thickness of material measured at any point along the shape of one corrugation.

3.16 **material thickness of a combined plain and corrugated conduit**: Sum of the plain conduit material thickness and the corrugated material thickness.

3.17 **threadable conduit and conduit fitting**: Conduit and conduit fittings which carry a thread for connection; or in or on which a thread can be formed.

3.18 **non-threadable conduit and conduit fitting**: Conduit and conduit fittings which are suitable for connection only by means other than threads.

3.19 **conduit joint**: Interface between two or more components of a conduit system, or between a conduit system and other equipment.

3.20 **external influence**: Factors which may affect the conduit system.

NOTE – Examples of such factors are a presence of water, oil or building materials, low and high temperatures, and corrosive or polluting substances.

3.21 **hot dip galvanising**: Coating of zinc, and zinc-iron alloy layers, obtained by dipping prepared iron or steel articles in molten zinc.

Note – Under some circumstances, the whole coating may consist of zinc-alloy layers.

3.22 **sherardizing**: Diffusion process in which articles are heated in close contact with zinc dust and inert operating media.

NOTE – The process is normally carried out in a slowly rotating closed container at a temperature in the region of 385 °C. The corrosion resistance is proportional to the coating thickness, which can be controlled.

4 General requirements

4.1 Conduit and conduit fittings within the scope of this standard shall be so designed and constructed that in normal use their performance is reliable and without danger to the user or surroundings.

When assembled in accordance with manufacturer's instructions as part of a conduit system, conduits and conduit fittings shall provide mechanical and, where required, electrical protection of the insulated conductors and cables contained therein.

4.2 The protective properties of the joint between the conduit and conduit fitting shall not be less than that declared for the conduit system.

4.3 Conduit and conduit fittings shall withstand the stresses likely to occur during transport, storage, recommended installation practice and application.

4.4 In general, compliance is checked by carrying out all the tests specified.

5 General conditions for tests

5.1 Tests in accordance with this standard are type tests.

5.2 Unless otherwise specified, the tests shall be carried out at an ambient temperature of (23 ± 2) °C.

5.3 Unless otherwise specified, each test shall be made on three new samples.

NOTE – Certain tests, for instance the checking of dimensions, do not affect a change in the property of the samples; therefore these samples are considered as new samples and can be used for further tests.

5.4 Samples of non-metallic and composite conduits and conduit fittings shall be conditioned for at least 240 h, at a temperature of (23 ± 2) °C and a relative humidity between 40 % and 60 %. All tests shall be carried out immediately after general conditioning.

5.5 Unless otherwise specified, the samples for each test shall be in a clean and new condition, with all parts in place and mounted as in normal use. After checking dimensions in accordance with clause 8, and unless otherwise specified in the relevant test, the conduit fittings shall be assembled with adequate lengths of conduit of the type for which they are intended. Due regard shall be taken of the manufacturer's instructions, especially where force is required in the assembly of the joint.

NOTE – Where similarities are claimed, the selection of representative fittings for test purposes can be agreed between the manufacturer, or responsible vendor, and the testing station.

5.6 Where the conduit entries are part of the detachable or loose type conduit fitting, the detachable conduit fitting shall be capable of being assembled again, after the test, according to the manufacturer's instructions without loss of the declared properties according to clause 6.

5.7 Unless otherwise specified, three samples are submitted to the tests, and the requirements are satisfied if the tests are met.

If only one of the samples does not satisfy a test, due to an assembly or a manufacturing defect, that test and any preceding one which may have influenced the result of the test shall be repeated, and also the tests which follow shall be made in the required sequence on another full set of samples, all of which shall comply with the requirements.

NOTE – If the additional set of samples is not submitted at the same time, a failure of one sample will entail a rejection. The applicant, when submitting the first set of samples, may also submit an additional set of samples which may be used, should one sample fail. The testing station will then, without further request, test the additional set of samples and will reject them only if a further failure occurs.

5.8 When toxic or hazardous processes are used, due regard shall be taken of the safety of the persons within the test area.

5.9 Conduit systems which are used as an integral part of other equipment shall also be tested in accordance with the relevant standard for that equipment.

6 Classification

NOTE – Annex A shows the classification coding format for declared properties of the conduit system, which may be incorporated in the manufacturer's literature.

6.1 *According to mechanical properties*

6.1.1 Resistance to compression

1 Very light
2 Light
3 Medium
4 Heavy
5 Very heavy

6.1.2 Resistance to impact

1 Very light
2 Light
3 Medium
4 Heavy
5 Very heavy

6.1.3 Resistance to bending

1 Rigid
2 Pliable
3 Pliable/Self-recovering
4 Flexible

6.1.4 Tensile strength

1 Very light
2 Light
3 Medium
4 Heavy
5 Very heavy

6.1.5 Suspended load capacity

1 Very light
2 Light
3 Medium
4 Heavy
5 Very heavy

6.2 *According to temperature*

Table 1 – Lower temperature range

Classification (1st numeral)	Transport, permanent application and installation – Temperature not less than: °C
1X	+ 5
2X	– 5
3X	– 15
4X	– 25
5X	– 45

Table 2 – Upper temperature range

Classification (2nd numeral)	Permanent application and installation – Temperature not more than: °C
X1	60
X2	90
X3	105
X4	120
X5	150
X6	250
X7	400

6.3 *According to electrical characteristics*

6.3.1 With electrical continuity characteristics

6.3.2 With electrical insulating characteristics

6.4 *According to resistance to external influences*

6.4.1 Protection against ingress of solid objects: protection in accordance with IEC 529 to a minimum of IP3X

6.4.2 Protection against ingress of water: protection in accordance with IEC 529 to a minimum of IPX0

6.4.3 Resistance against corrosion

6.4.3.1 Without protection

6.4.3.2 With protection as detailed in table 10

6.5 *According to resistance to flame propagation*

6.5.1 Non-flame propagating

6.5.2 Flame propagating

6.5.3 Other fire effects: under consideration

7 Marking and documentation

7.1 The conduit shall be marked by a trade mark or a name identifying the manufacturer or responsible vendor.

The conduit shall also be marked in such a way that it can be identified in the manufacturer's, or responsible vendor's, literature.

7.1.1 The conduit may also be marked with the classification code, which shall be in accordance with annex A, and which shall include at least the first four digits.

7.1.2 The manufacturer shall be responsible for indicating the compatibility of parts within a conduit system.

7.2 The conduit fitting shall be marked in accordance with 7.1, on the product wherever possible, but where this is impractical, then the mark may be on a label attached to the product, or on the box or carton containing the fittings.

7.3 Flame propagating material shall be orange in colour. It shall not be coloured orange by painting or other superficial means.

Non-flame propagating material may be of any colour except yellow, orange or red, unless clearly marked on the product to be of non-flame propagating material.

7.4 Earthing facilities shall be indicated by the symbol for protective earth in accordance with IEC 417, symbol 417-IEC-5019-a. This marking shall not be placed on easily removable parts, for example screws.

7.5 *The marking shall be durable and easily legible*

Compliance is checked by inspection and by rubbing the marking by hand for 15 s with a piece of cloth soaked with water, and again for 15 s with a piece of cloth soaked with petroleum spirit.

NOTES

1 Petroleum spirit is defined as the aliphatic solvent hexane with a content of aromatics of maximum 0,1% volume, a kauri-butanol value of 29, initial boiling point 65 °C, a dry point 69 °C, and specific density approximately 0,68 kg/l.

2 Marking may be applied, for example, by moulding, pressing, engraving, printing, adhesive labels, or water slide transfers.

3 Marking made by moulding, pressing or engraving is not subjected to this test.

After the test, the marking shall be legible.

8 Dimensions

8.1 Threads and outside diameters, where appropriate, shall comply with IEC 423.

Compliance is checked by means of the gauges specified in IEC 423.

8.2 Other dimensions shall comply with the requirements of the relevant part 2 of this standard.

9 Construction

9.1 Within the conduit system, there shall be no sharp edges, burrs or surface projections which are likely to damage insulated conductors or cables, or inflict injury on the installer or user.

The manufacturer shall be responsible for providing guidelines to assist the safe installation of the conduit system.

Compliance is checked by inspection, if necessary after cutting the samples apart.

9.2 Screws, if any, used for attaching components or covers to conduit fittings, or in joints to conduits, shall not cause damage to cable insulation when correctly inserted. They shall have ISO metric threads. Thread-cutting screws shall not be used.

Fixing screws and small clips for use with non-metallic or composite conduit fittings need not be of non-metallic material if they are isolated from insulated conductors or cables.

Screw fixing means shall be so designed to withstand the mechanical stresses occurring during installation and normal use.

Compliance for screw fixing using preformed threads is checked by the test in 9.3, followed by inspection.

Compliance for screw fixing using thread-forming screws is checked by the test in 9.4, followed by inspection.

9.3 Screws used with preformed threads shall be tightened and loosened 10 times for screws in engagement with a thread of non-metallic material and for screws of non-metallic material, and five times in all other cases.

The test shall be made by using a suitable screwdriver or spanner applying a torque in accordance with table 3. The screws shall not be tightened by sudden or jerky motions.

After the test, there shall be no damage sustained by the screw or nut, such as breakage of the screw or damage to the head or thread, that will impair the further use of the screw or nut.

9.4 Thread-forming screws are tightened and loosened 10 times for screws in engagement with a thread of insulating material, and five times in all other cases. Screws in engagement with a thread of insulating material shall be completely removed each time.

The test is made by using a suitable screwdriver or spanner applying a torque in accordance with table 3. The screw shall not be tightened by sudden or jerky motions.

After the test, there shall be no damage, such as breakage of the screw or damage to the head or thread, that will impair the further use of the screw.

Table 3 – Torque values for screw tests

Nominal diameter of thread mm		Torque Nm	
Over	Up to and including	I (note 1)	II (note 2)
-	2,8	0,4	0,4
2,8	3,0	0,5	0,5
3,0	3,2	0,6	0,6
3,2	3,6	0,8	0,8
3,6	4,1	1,2	1,2
4,1	4,7	1,8	1,8
4,7	5,3	2,0	2,0
5,3	6,0	2,5	3,0
6,0	8,0	3,5	6,0
8,0	10,0	4,0	10,0

NOTES

1 Column I applies to screws which are tightened by means of a screwdriver.

2 Column II applies to screws and nuts which are tightened by means other than a screwdriver.

9.5 Any material, for example rubber, fibre etc., within the joint, which may be exposed to external influences when assembled according to the manufacturer's instructions, shall have at least the same level of resistance to the external influence as either the conduit or the conduit fitting.

Compliance is checked by means of tests specified in clause 14.

9.6 For conduit systems that are assembled by means other than threads, the manufacturer shall indicate whether the system can be disassembled and if so, how this can be achieved.

Compliance is checked by inspection and by manual test.

10 Mechanical properties

10.1 *Mechanical strength*

10.1.1 Conduit systems shall have adequate mechanical strength.

10.1.2 Conduits, according to their classification, when bent or compressed, or exposed to impact or extreme temperature of a specified value in accordance with impact and temperature classification declared for the product, either during, or after, installation according to the manufacturer's instructions, shall not crack and shall not be deformed to such an extent that introduction of the insulated conductors or cables becomes difficult, or that the installed insulated conductors or cables are likely to be damaged while being drawn in.

10.1.3 Conduit systems intended as a mounting for other equipment shall have adequate mechanical strength to support such equipment and to withstand the force required to operate the equipment, both during and after installation.

10.1.4 *Compliance is checked by the tests specified in 10.2 to 10.8.*

10.2 *Compression test*

10.2.1 *Samples of conduit, each (200 ± 5) mm long, shall be subjected to a compression test, using the apparatus shown in figure 1.*

10.2.2 *Before the test, the outside diameters of the samples shall be measured.*

10.2.3 *The samples shall be positioned on a flat steel support, and a steel intermediate piece, as shown in figure 1, shall be placed in the middle of the sample.*

10.2.4 *A continuously increasing compression force, reaching the values shown in table 4 within 30 s, shall be applied to the intermediate piece.*

10.2.5 *After the force given in table 4 has been applied for (60 ± 2) s, the outside diameter of the sample shall be measured where flattening has taken place, without removing the force.*

Table 4 – Compression force

Classification	Conduits	Compression force Tolerance $^{+4}_{0}$ % N
1	Very light	125
2	Light	320
3	Medium	750
4	Heavy	1250
5	Very heavy	4000

10.2.6 *The difference between the initial outside diameter and the diameter of the flattened sample shall not exceed 25 % of the initial outside diameter measured before the test.*

10.2.7 *The force and the intermediate piece are then removed and, 60 s after removal, the outside diameter of the samples, where they have flattened, shall be measured again.*

The difference between the initial diameter and the diameter of the flattened samples shall not exceed 10 % of the outside diameter, measured before the test.

10.2.8 *After the test, the samples shall show no cracks visible to normal or corrected vision without additional magnification.*

10.3 *Impact test*

10.3.1 *Twelve samples of conduits, each (200 ± 5) mm in length, or twelve conduit fittings are subjected to an impact test by means of the apparatus shown in figure 2.*

Before the test, the samples are assembled with all the components as for normal use, including conduits required for conducting of the test.

NOTE – Fittings are not required when testing conduits.

Parts, which are not accessible when mounted in normal use, and small conduit fittings whose maximum dimension is less than 20 mm, are not subjected to this test.

10.3.2 *The test apparatus shall be placed on a pad of closed cell expanded sponge (40 ± 1) mm thick when uncompressed, and having a density of (538 ± 22) kg/m^3.*

The test apparatus, together with the samples, shall be placed in a refrigerator, the temperature within which shall be maintained at the declared temperature specified in table 1 with a tolerance of ±2 °C.

When the samples have attained the temperature specified, or after 2 h, whichever is the longer period, each sample shall be placed in position on the steel base as shown in figure 2. The hammer shall be allowed to fall once on each sample. The mass of the hammer and the fall height shall be as given in table 5.

The test shall be made on the weakest part of the conduit fitting, except that it shall not be applied to within 5 mm of any conduit entry. Samples of conduit are tested at the centre of their length.

Table 5 – Impact test values

Classification	Conduit and fittings	Mass of hammer Tolerance $^{+1}_{0}$ % kg	Fall height Tolerance ±1 % mm
1	Very light	0,5	100
2	Light	1,0	100
3	Medium	2,0	100
4	Heavy	2,0	300
5	Very heavy	6,8	300

10.3.3 *After the test, in nine at least of the samples there shall be no sign of disintegration, nor shall there be any crack visible to normal or corrected vision without magnification, and there shall be no deformation impairing its normal use.*

10.4 *Bending test*

Compliance is checked by the relevant tests of part 2 of this standard.

10.5 *Flexing test*

Compliance is checked by the relevant tests of part 2 of this standard.

10.6 *Collapse test*

Compliance is checked by the relevant tests of part 2 of this standard.

10.7 *Tensile test*

10.7.1 Conduit systems declaring tensile strength shall be tested as follows:

A sample of conduit and two terminating fittings are assembled in accordance with the manufacturer's instructions so that the overall length is approximately 300 mm. The assembly is subjected to a continuously increasing tensile force over a period of 30 s to 40 s to the value specified in table 6. After 2 min ± 10 s the force is removed.

10.7.2 Where elongation occurs, the manufacturer shall be responsible for providing guidelines to assist the safe installation of the conduit system.

10.7.3 For conduit systems where tensile strength is not declared, the tensile strength of the joint shall meet the requirements of the relevant tests of the appropriate part 2.

10.7.4 After the test, the terminating fittings shall remain properly assembled to the conduit, and there shall be no damage visible to normal or corrected vision without magnification.

Table 6 – Tensile force

Classification	Conduit and fittings	Tensile force Tolerance $^{+2}_{0}$ % N
1	Very light	100
2	Light	250
3	Medium	500
4	Heavy	1000
5	Very heavy	2500

10.8 *Suspended load test*

The conduit fitting, declared by the manufacturer to be suitable for suspended loads, is secured to a rigid structure using a method provided by the manufacturer, with the suspension means pointing downwards.

A load, with a time duration in accordance with table 7, is suspended by the means provided, and installed in accordance with the manufacturer's instructions.

The fitting shall be deemed to have passed if at the end of the test, there are no cracks visible to normal or corrected vision without magnification, and there is no deformation of the conduit fitting impairing its normal use.

For non-metallic and composite conduit fittings, the test shall be carried out in a heating cabinet, the temperature within which is maintained at the declared maximum temperature given in table 2 with a tolerance of ± 2 °C.

Table 7 – Suspended load

Classification	Fittings	Load Tolerance $^{+2}_{0}$ % N	Duration Tolerance $^{+15}_{0}$ min h
1	Very light	20	48
2	Light	30	48
3	Medium	150	48
4	Heavy	450	48
5	Very heavy	850	48

11 Electrical properties

11.1 *Electrical requirements*

11.1.1 Conduit systems declaring electrical continuity characteristics shall be checked by the tests specified in 11.2 immediately after the tests specified in 14.2.

NOTE – Conduit systems, in some circumstances, may be used in total or in part as a protective conductor in an electrical installation. In that event, the system will be tested after final installation to confirm its suitability for that purpose, in accordance with the installation rules.

11.1.2 Conduit systems of metal or composite materials shall be so constructed that accessible metal parts can be bonded to earth.

Compliance is checked by the test in 11.2.

11.1.3 Accessible conductive parts of the metal or composite conduit system, which may become live in the event of a fault, shall be effectively earthed.

Compliance is checked by the test in 11.2.

11.1.4 Conduit systems of non-metallic or composite materials, where declared, shall have an adequate electrical insulating strength and insulating resistance.

Compliance is checked by the test in 11.3.

11.2 *Bonding test*

An arrangement of conduit and conduit fittings, consisting of 10 pieces of conduit, shall be coupled together, in accordance with the manufacturer's instructions and figure 3, by means of conduit fittings representing, in approximately equal numbers, each type of fitting in the batch. The fittings shall be spaced between 25 mm and 28 mm apart. A current of 25 A, having a frequency of 50 Hz to 60 Hz derived from an a.c. source having a no-load voltage not exceeding 12 V, is passed through the assembly for 1 min $^{+5}_{0}$ s, after which the voltage drop is measured and the resistance calculated from the current and that voltage drop.

The resistance shall not exceed 0,05 Ω.

If the numbers of different types of fittings cannot all be accommodated in a single test, the test described above shall be repeated until all such different types of fittings have been tested.

Where special devices are required for the coupling of conduit and conduit fittings, they shall be sufficient to remove the protective coating from the conduit, or the protective finish must be removed in accordance with the manufacturer's instructions.

11.3 *Electrical insulating strength and resistance*

11.3.1 Conduits

11.3.1.1 Samples of conduit are immersed over a length of 1 m ± 10 mm in accordance with figure 4 or figure 5 in a salt water solution at (23 ± 2) °C, with a length of 100 mm kept above the level of the solution.

Rigid conduit samples are to be supplied by the manufacturer complete with one end sealed with an appropriate insulating material with high electrical insulation, for example silicon elastomer; see figure 4.

Pliable and flexible conduit samples are bent into a "U" shape and then immersed; see figure 5.

The salt water solution is made by completely dissolving 1 g/l of sodium chloride.

The salt water solution is poured into the open end of the conduit to match the external level. An electrode is placed inside the conduit and another placed into the tank.

11.3.1.2 After 24 h ± 15 min, a voltage is applied across the two electrodes, gradually being increased from 1000 V to 2000 V of substantially sine wave form and having a frequency of 50 Hz to 60 Hz. Having reached 2000 V, the voltage is maintained for a period of 15 min $^{+5}_{0}$ s.

The high-voltage transformer used for the test is so designed that, when the output terminals are short-circuited after the output voltage has been adjusted to the appropriate test voltage, the output current is of at least 200 mA. The overcurrent relay shall not trip when the output current is less than 100 mA. Care is taken that the r.m.s. value of the test voltage applied is measured within ±3 %.

The samples shall be considered to have adequate electrical insulating strength if a 100 mA trip device, incorporated into the circuit, does not trip during the 15 min test.

11.3.1.3 Immediately after the test in 11.3.1.2, the same samples shall be subjected to an electrical insulation resistance test. A direct voltage of 500 V shall be applied across the two electrodes.

11.3.1.4 After (60 ± 2) s from the application of the voltage, the insulation resistance between the electrodes shall be obtained. Conduits shall be considered to have adequate electrical insulation resistance if the measured resistance is greater than 100 MΩ.

11.3.2 Conduit fittings

11.3.2.1 Samples of conduit fittings shall be immersed for 24 h ± 15 min, in water at (23 ± 2) °C, and then thoroughly dried at room temperature.

11.3.2.2 Conduit fitting samples shall be assembled in accordance with the manufacturer's instructions with a short length of conduit. All other open ends are sealed with an appropriate insulating material. The inside of the fitting is filled with lead shot of a diameter between 0,5 mm and 1,0 mm, and an electrode is inserted into the lead shot via the conduit.

An outer electrode of aluminium foil is wrapped around the outside of the fitting and compressed so that it follows the outer contour of the fitting as closely as possible.

11.3.2.3 Conduit fitting samples shall be tested in accordance with 11.3.1.2 within 1 h of removal from the water.

11.3.2.4 Immediately after the test in 11.3.2.3, the same samples are subjected to an electrical insulation resistance test. A d.c. voltage of 500 V is applied across the two electrodes.

11.3.2.5 After (60 ± 2) s from the application of the voltage, the insulation resistance between the electrodes is obtained. Fittings are considered to have adequate electrical insulation resistance if the resistance is greater than 5 MΩ.

12 Thermal properties

12.1 *Resistance to flame propagation*

12.1.1 Non-flame propagating conduit systems shall have adequate resistance to flame propagation.

12.1.2 Samples of non-metallic and composite conduits shall be checked by applying a 1 kW flame, specified in IEC 695-2-4/1.

12.1.2.1 A sample of length (675 ± 10) mm, is mounted vertically in a rectangular metal enclosure with one open face, as shown in figure 6, in an area substantially free from draughts.

The general arrangement is shown in figure 7.

Mounting is by means of two metal clamps approximately 25 mm wide, spaced (550 ± 10) mm apart and approximately equidistant from the ends of the sample.

A steel rod of (2,0 ± 0,1) mm for sizes up to 12 mm, (6,0 ± 0,1) mm for sizes 16 mm to 25 mm and (16,0 ± 0,1) mm for conduits with diameters 32 mm and above, is passed through the sample. It is rigidly and independently mounted and clamped at the upper end to maintain the sample in a straight and vertical position. The means of mounting is such as not to obstruct drops from falling onto the tissue paper.

A suitable piece of white pinewood board, approximately 10 mm thick, covered with a single layer of white tissue paper, is positioned on the lower surface of the enclosure.

The assembly of sample, rod and clamping apparatus is mounted vertically in the centre of the enclosure, the upper extremity of the lower clamp being (500 ± 10) mm above the internal lower surface of the enclosure.

12.1.2.2 The burner is supported so that its axis is in an angle of (45 ± 2)° to the vertical.

The flame is applied to the sample so that the distance from the top of the burner tube to the sample measured along the axis of the flame is (100 ± 10) mm, and the axis of the flame intersects with the surface of the sample at a point (100 ± 5) mm from the upper extremity of the lower clamp, and so that the axis of the flame intersects with the axis of the sample.

12.1.2.3 The test is carried out on three samples.

The flame is applied to the samples for the period specified in table 8, and is then removed. During the application of the flame, it shall not be moved except to remove it at the conclusion of the period of the test.

Table 8 – Times of exposure of the sample to the flame

Material thickness mm		Flame application time Tolerance $^{+1}_{0}$ s s
Over	Up to	
-	0,5	15
0,5	1,0	20
1,0	1,5	25
1,5	2,0	35
2,0	2,5	45
2,5	3,0	55
3,0	3,5	65
3,5	4,0	75
4,0	4,5	85
4,5	5,0	130
5,0	5,5	200
5,5	6,0	300
6,0	6,5	500

After the conclusion of the test, and after any burning of the sample has ceased, the surface of the sample is wiped clean by rubbing with a piece of cloth soaked with water.

12.1.2.4 All three samples shall pass the test.

If the sample is not ignited by the test flame, it shall be deemed to have passed the test.

If the sample burns, or is consumed without burning, the sample shall be deemed to have passed the test if after any burning has ceased, and after the sample has been wiped in accordance with 12.1.2.3, there is no evidence of burning or charring within 50 mm of the lower extremity of the upper clamp, and also within 50 mm of the upper extremity of the lower clamp.

If the sample burns, it shall be deemed to have failed the test if combustion is still in progress 30 s after removal of the flame.

If the tissue paper ignites, the sample shall be deemed to have failed the test.

For the part of the sample below the burner, the presence of molten material on the internal or external surfaces shall not entail failure if the sample itself is not burned or charred.

12.1.3 Compliance of non-metallic and composite conduit fittings is checked by using the glow wire test in IEC 695-2-1.

The glow wire shall be applied once to each sample in the most unfavourable position for its intended use (with the surface tested in a vertical position) at a temperature of 750 °C.

The sample is deemed to have passed this test if there is no visible flame or sustained glowing, or if flames or glowing extinguish within 30 s of the removal of the glow wire.

12.2 *Resistance to heat*

12.2.1 Non-metallic and composite conduits shall have adequate resistance to heat.

Compliance is checked by the test in 12.2.3 and verified with 12.2.4 .

12.2.2 The load for the heating test shall be the same classification as the declared compression classification.

12.2.3 Samples of conduit, each (100 ± 5) mm long, together with the test apparatus as shown in figure 8, shall be kept for 4 h ± 5 min in a heating cabinet at the declared temperature given in table 2, with a tolerance of ± 2 °C.

After this period, each sample is loaded for 24 h ± 15 min in an apparatus, as shown in figure 8, with an appropriate mass applied through a steel rod (6,0 ± 0,1) mm in diameter, disposed at right angles to the axis of the conduit.

The sample is subjected to a total mass, including the mass of the rod, as shown in table 9, placed in the middle of the sample.

The sample, under load, shall then be allowed to cool to room temperature.

Table 9 – Load for heating test

Classification	Conduits	Mass Tolerance $^{+1}_{0}$ % kg
1	Very light	0,5
2	Light	1,0
3	Medium	2,0
4	Heavy	4,0
5	Very heavy	8,0

12.2.4 The load is then removed, and immediately after its removal, it shall be possible to pass the appropriate gauge, specified in the relevant part 2, through the conduit, under its own weight and without any initial speed, with the sample in the vertical position.

13 Fire effects

Under consideration.

14 External influences

14.1 *Degree of protection provided by enclosure*

Conduit systems, when assembled in accordance with the manufacturer's instructions, shall have adequate resistance to external influences according to the classification declared by the manufacturer, with a minimum requirement of IP30.

Compliance is checked by the tests specified in 14.1.1 and 14.1.2.

14.1.1 Degree of protection – Ingress of foreign solid objects

14.1.1.1 An assembly is made of a conduit fitting with a short length of conduit assembled in each entry. Where necessary, the open ends of the assembly are plugged, or are not part of the test.

14.1.1.2 The assembly shall be tested in accordance with the appropriate test of IEC 529. For numeral 5, category 2 applies.

14.1.1.3 The assembly, tested for numeral 5 or 6, shall be deemed to have passed the test if there is no ingress of dust visible to normal or corrected vision without magnification.

14.1.2 Degree of protection – Ingress of water

14.1.2.1 An assembly is made of a conduit fitting with a short length of conduit assembled in each conduit entry. Where necessary, the open end of the conduit is plugged, or is not part of the test.

14.1.2.2 The assembly shall be tested in accordance with the appropriate test of IEC 529.

14.1.2.3 The assembly, tested for numeral 1 and above, shall be deemed to have passed the test if there is not sufficient ingress of water to form a drop visible to normal or corrected vision without magnification.

14.2 *Resistance against corrosion*

14.2.1 Metallic and composite conduit systems, excluding screw threads, shall have adequate resistance against corrosion, both inside and outside, in accordance with the classification given in table 10.

Compliance is checked by the tests specified in 14.2.2.1, 14.2.2.2 and 14.2.2.3.

14.2.2 Tests for resistance to corrosion for steel and steel composite conduit systems

14.2.2.1 Low protection conduit and conduit fittings shall be inspected for completeness of covering by the protective coating, both inside and outside.

14.2.2.2 Medium protection conduit and conduit fittings shall be cleaned with a piece of wadding soaked in trichloroethane or similar agent and then dried.

They shall then be totally immersed in a solution of 0,75 % potassium ferricyanide [$K_3Fe(CN)_6$] and 0,25 % ammonium persulphate [$(NH_4)_2S_2O_8$] in water and a quantity of about 0,1 % of a suitable wetting agent, for instance a sodium salt of an alkylnaphthaline sulphonic acid, shall be added.

The solution and the samples shall be maintained at a temperature of (23 ± 2) °C.

Each sample shall be tested separately, a fresh solution being used each time.

After immersion for 5 min $^{+5}_{0}$ s, the samples shall be removed from the solution and left to dry at ambient temperature in air. After completion of the test as described above, the samples shall show no more than two blue coloured spots on each square centimetre of the surface, and no blue spot shall have a dimension larger than 1,5 mm. Traces of rust on sharp edges, screw threads and machined surfaces, also any yellowish film removable by rubbing, shall be ignored.

Table 10 – Resistance to corrosion classification

Classification	Protection afforded	Example
1	Low protection, inside and outside	Priming paint
2	Medium protection, inside and outside	Stove enamel/electro zinc plate/air drying paint
3	Medium/High composite protection inside: class 2 outside: class 4	Stove enamel Sherardizing
4	High protection, inside and outside	Hot dip zinc coating Sherardizing Stainless steel

14.2.2.3 High protection conduit and conduit fittings shall be degreased by immersion in trichloroethane or a similar degreasing agent for 10 min $^{+5}_{0}$ s, and wiped dry with a piece of soft cloth. They shall then be immersed in a 2 % solution of sulphuric acid in water for 15 s, thoroughly cleaned in running water and again wiped dry with a piece of clean soft cloth. Each sample shall then be totally immersed in a solution of copper sulphate ($CuSO_4$ $5H_2O$) in distilled water, having a specific gravity of 1,186 kg/l at (23 ± 2) °C.

The solution and the samples shall be maintained at a temperature of (23 ± 2) °C, without stirring.

NOTE – The solution is made by dissolving 360 g of crystalline copper sulphate in 1l of distilled water and neutralising with copper carbonate or copper hydroxide (about 1 g/l). The specific gravity is then checked and adjusted as necessary.

The container shall be such that it will not react with the solution and it shall be of such a size as to provide clearance of at least 25 mm between the walls thereof and the sample.

Each sample shall be immersed four times in succession in the same solution, each time for 1 min $^{+5}_{0}$ s. A fresh solution shall be used for each sample. After each immersion, the sample shall immediately be cleaned in running water with a brush to remove any black deposit. The sample shall then be wiped dry with a piece of clean soft cloth, and, except after the fourth immersion, returned to the solution. Care should be taken to clean out all holes and pockets.

After the test, the sample shall show no precipitation of copper which cannot be scrubbed off in running water, if necessary after immersion for 15 s in a 10 % solution of hydrochloric acid in water.

Traces of copper precipitation on screw threads, sharp edges and machined surfaces may be ignored.

14.2.3 Tests for resistance to corrosion for metals other than steel

Under consideration.

15 Electromagnetic compatibility

Products covered by this standard are, in normal use, passive in respect of electromagnetic influences (emission and immunity).

NOTE – When products covered by this standard are installed as part of a wiring installation, the installation may emit, or may be influenced by, electromagnetic signals. The degree of influence will depend on the nature of the installation within its operating environment and the apparatus connected by the wiring.

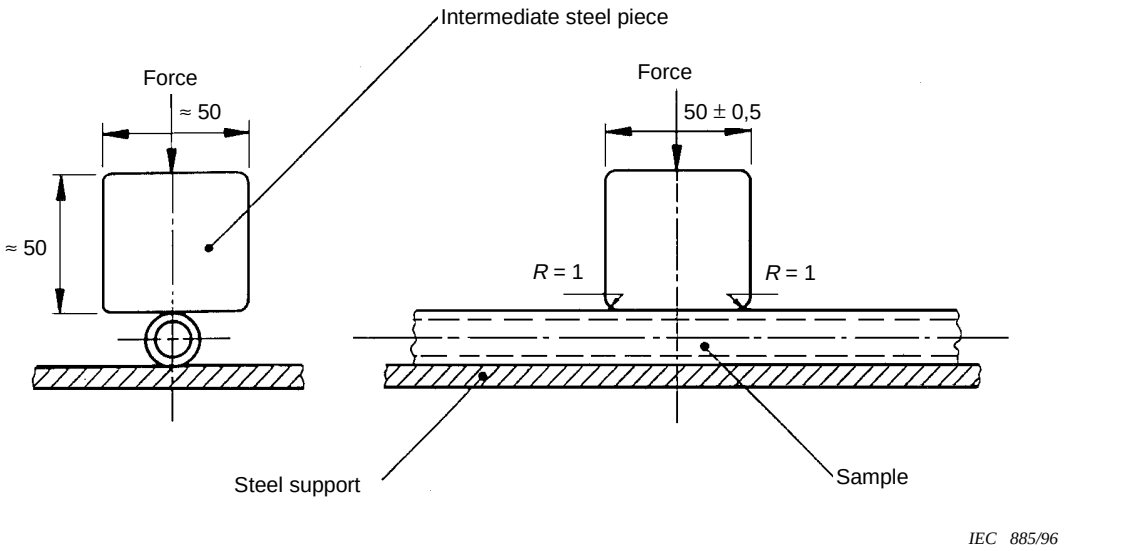

Dimensions in millimetres

Figure 1 – Arrangement for compression test

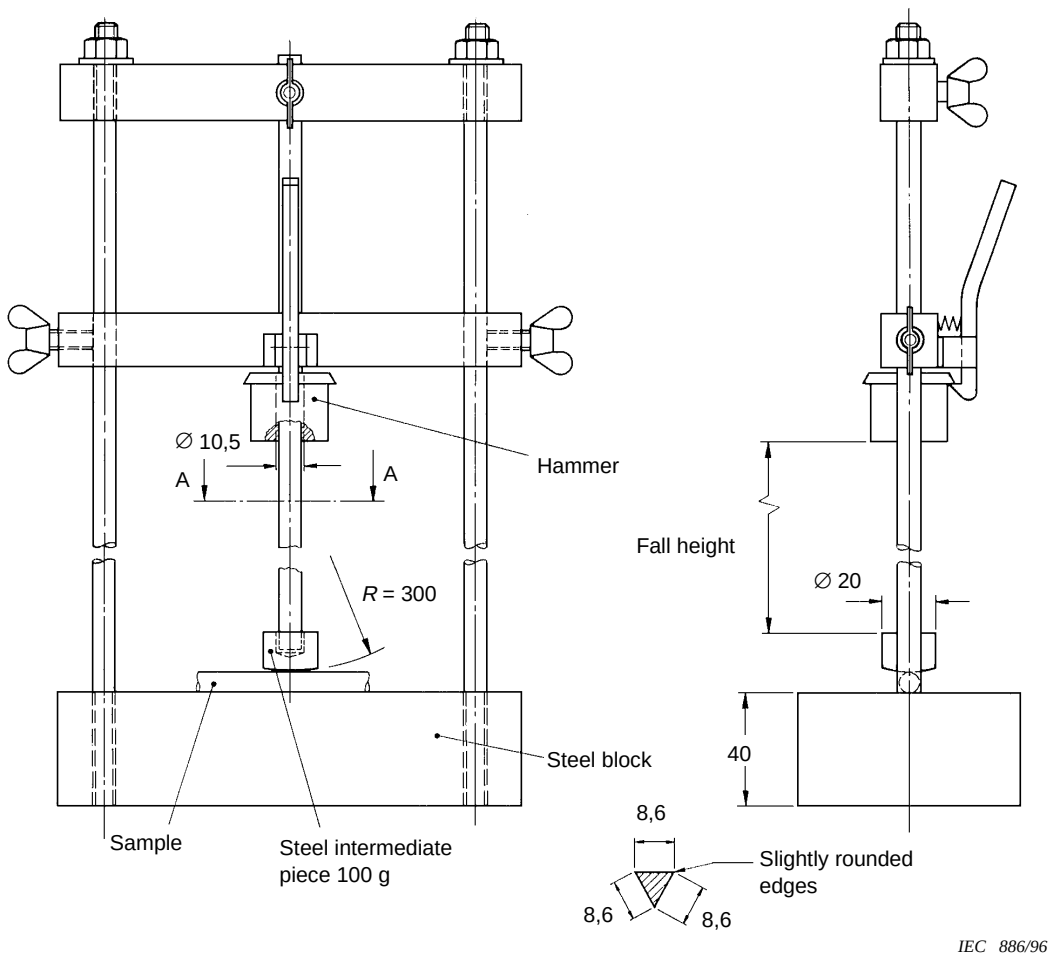

Dimensions in millimetres

Figure 2 – Impact test apparatus

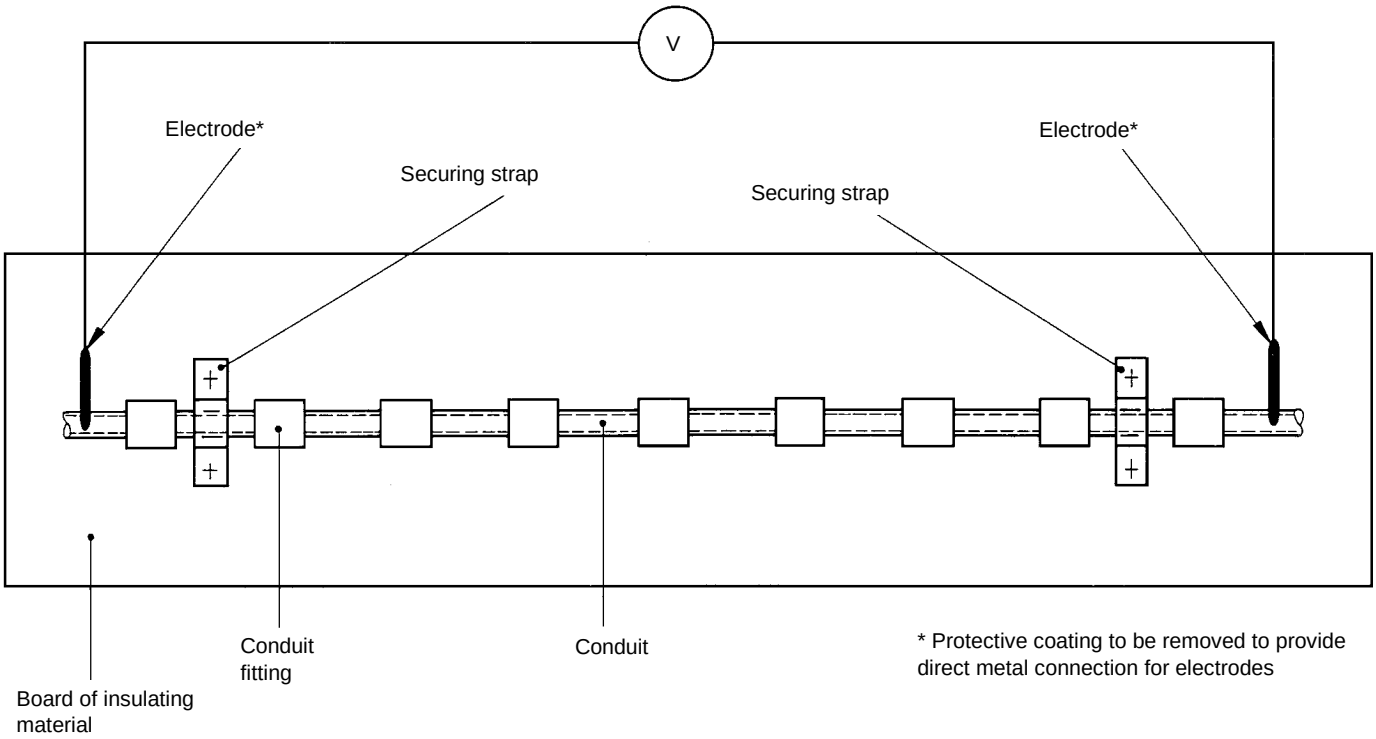

IEC 887/96

Dimensions in millimetres

Figure 3 – Assembly of conduit and conduit fitting for bonding test

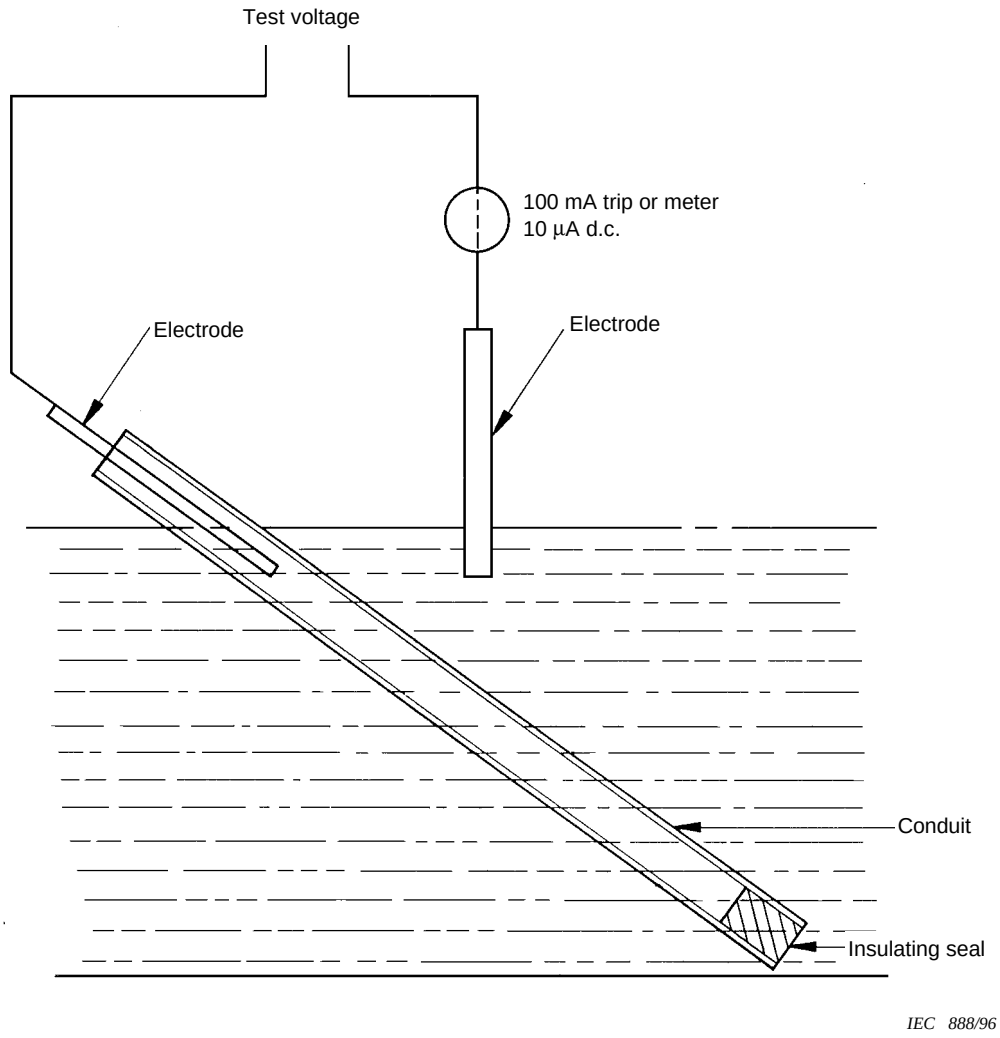

Figure 4 – Arrangement for insulation resistance and electric strength test – Rigid conduit

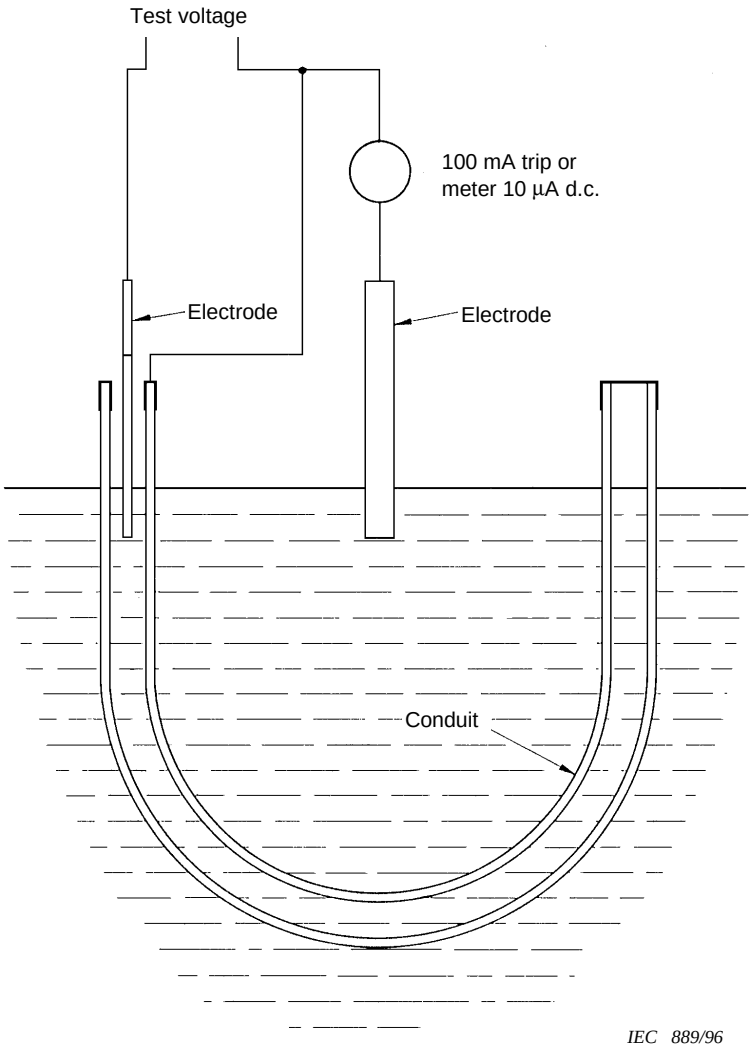

NOTE – Remove sharp edges and burrs.

Figure 5 – Arrangement for insulation resistance and electric strength test – Pliable and flexible conduit

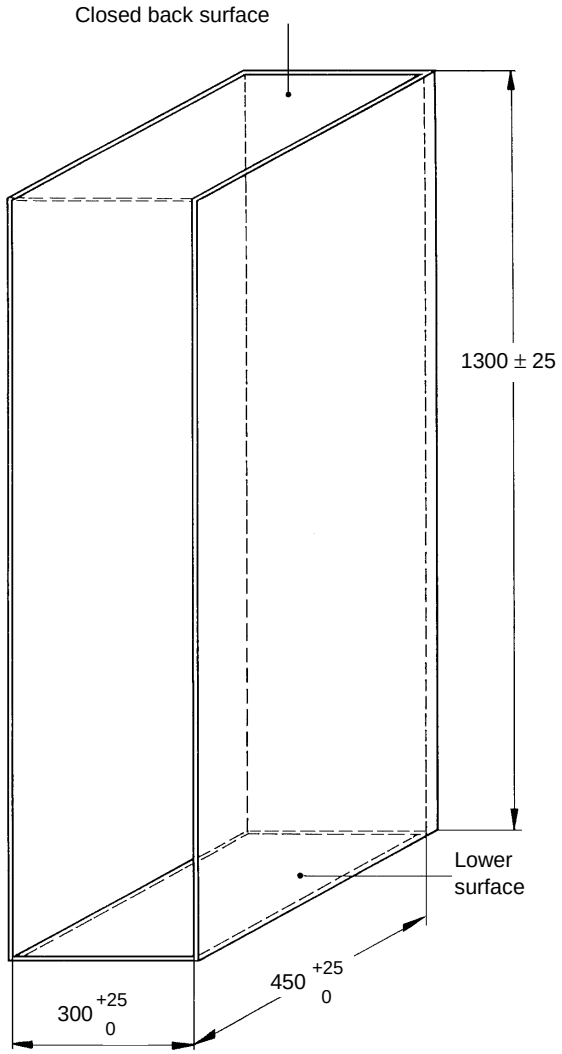

Material: metal
Dimensions in millimetres
All measurements given inside.

IEC 890/96

NOTE – This drawing is not intended to govern design except as regards the dimensions shown.

Figure 6 – Enclosure for burning test

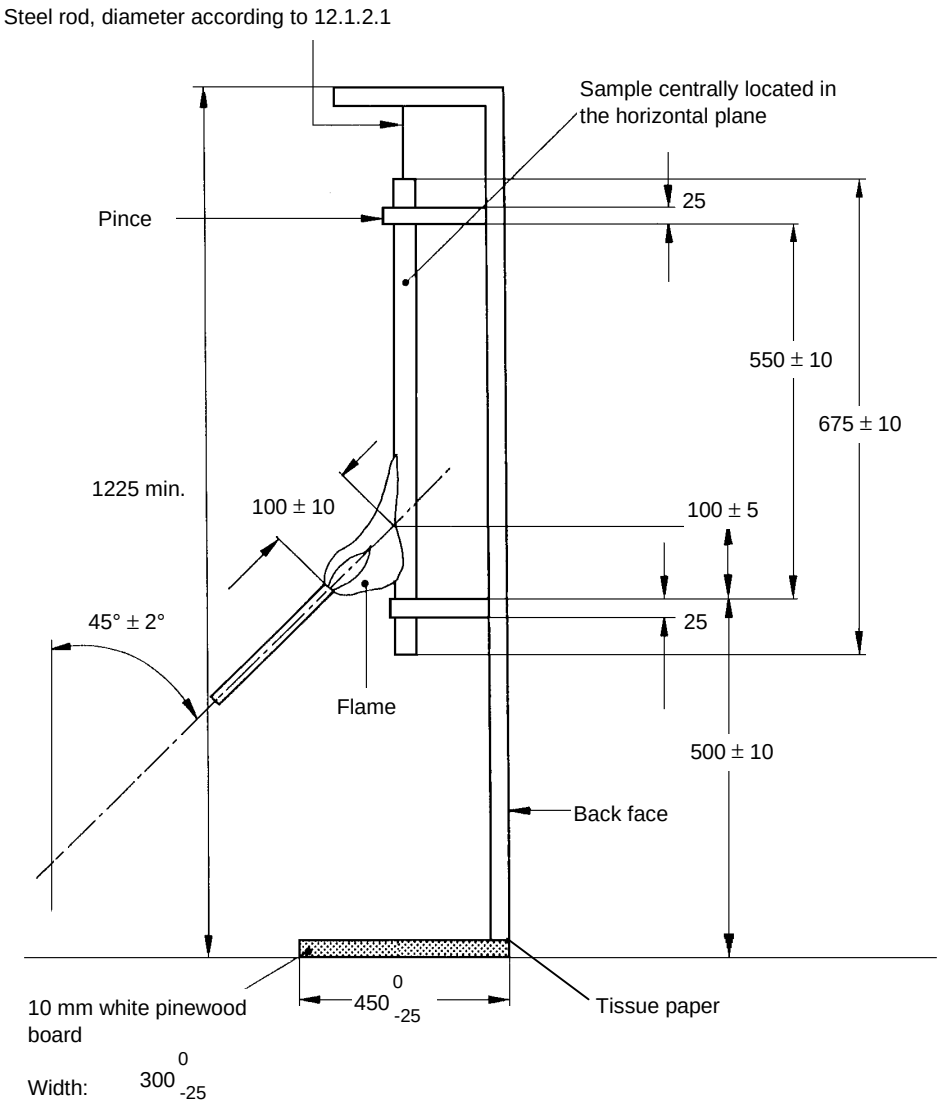

IEC 891/96

Dimensions in millimetres

NOTE – This drawing is not intended to govern design except as regards the dimensions shown.

Figure 7 – Arrangement for burning test

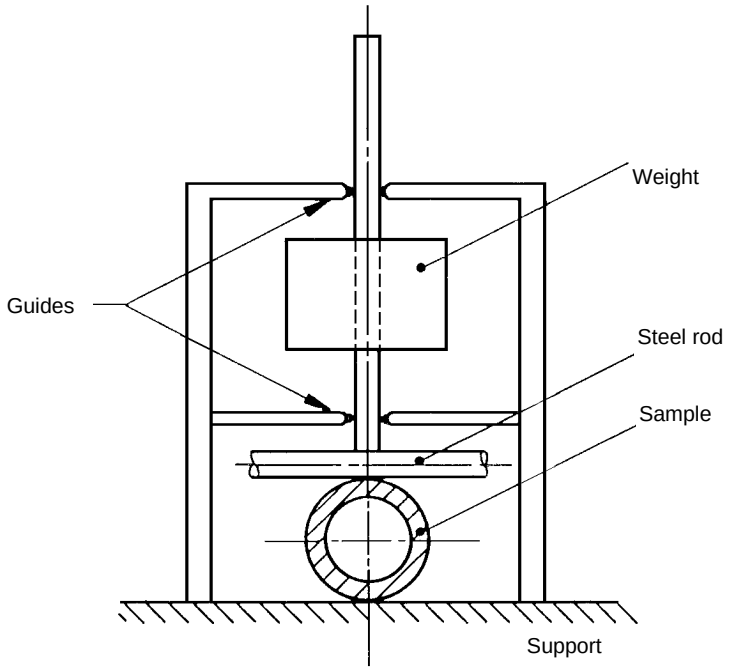

IEC 892/96

Figure 8 – Test apparatus for resistance to heat

Annex A
(normative)

Classification coding for conduit systems

NOTE – Annex A shows the classification coding format for declared properties of the conduit system, which may be incorporated in the manufacturer's literature.

First digit – Resistance to compression (see 6.1.1)	
Very light compression strength	1
Light compression strength	2
Medium compression strength	3
Heavy compression strength	4
Very heavy compression strength	5

Second digit – Resistance to impact (see 6.1.2)	
Very light impact strength	1
Light impact strength	2
Medium impact strength	3
Heavy impact strength	4
Very heavy impact strength	5

Third digit – Lower temperature range (see table 1)	
+5 °C	1
-5 °C	2
-15 °C	3
-25°C	4
-45 °C	5

Fourth digit – Upper temperature range (see table 2)	
+60 °C	1
+90 °C	2
+105 °C	3
+120 °C	4
+150 °C	5
+250 °C	6
+400 °C	7

Fifth digit – Resistance to bending (see 6.1.3)	
Rigid	1
Pliable	2
Pliable / self recovering	3
Flexible	4

Sixth digit – Electrical characteristics (see 6.3)	
None declared	0
With electrical continuity characteristics	1
With electrical insulating characteristics	2
With electrical continuity and insulating characteristics	3

Seventh digit – Protection against ingress of solid objects (see 6.4.1)	
Protected against solid foreign objects of 2,5 mm diameter and greater	3
Protected against solid foreign objects of 1,0 mm diameter and greater	4
Dust protected	5
Dust-tight	6

Eighth digit – Protection against ingress of water (see 6.4.2)	
None declared	0
Protected against vertically falling water drops	1
Protected against vertically falling water drops when the conduit system is tilted up to an angle of 15°	2
Protected against spraying water	3
Protected against splashing water	4
Protected against water jets	5
Protected against powerful water jets	6
Protected against the effects of temporary immersion in water	7

Ninth digit – Resistance against corrosion (see 6.4.3 and table 10)	
Low protection inside and outside	1
Medium protection inside and outside	2
Medium protection inside, high protection outside	3
High protection inside and outside	4

Tenth digit – Tensile strength (see 6.1.4)	
None declared	0
Very light tensile strength	1
Light tensile strength	2
Medium tensile strength	3
Heavy tensile strength	4
Very heavy tensile strength	5

Eleventh digit – Resistance to flame propagation (see 6.5)	
Non-flame propagating	1
Flame propagating	2

Twelfth digit – Suspended load capacity (see 6.1.5)	
None declared	0
Very light suspended load capacity	1
Light suspended load capacity	2
Medium suspended load capacity	3
Heavy suspended load capacity	4
Very heavy suspended load capacity	5

Thirteenth digit – Fire effects

Under consideration.

ICS 29.120.10

Typeset and printed by the IEC Central Office
GENEVA, SWITZERLAND